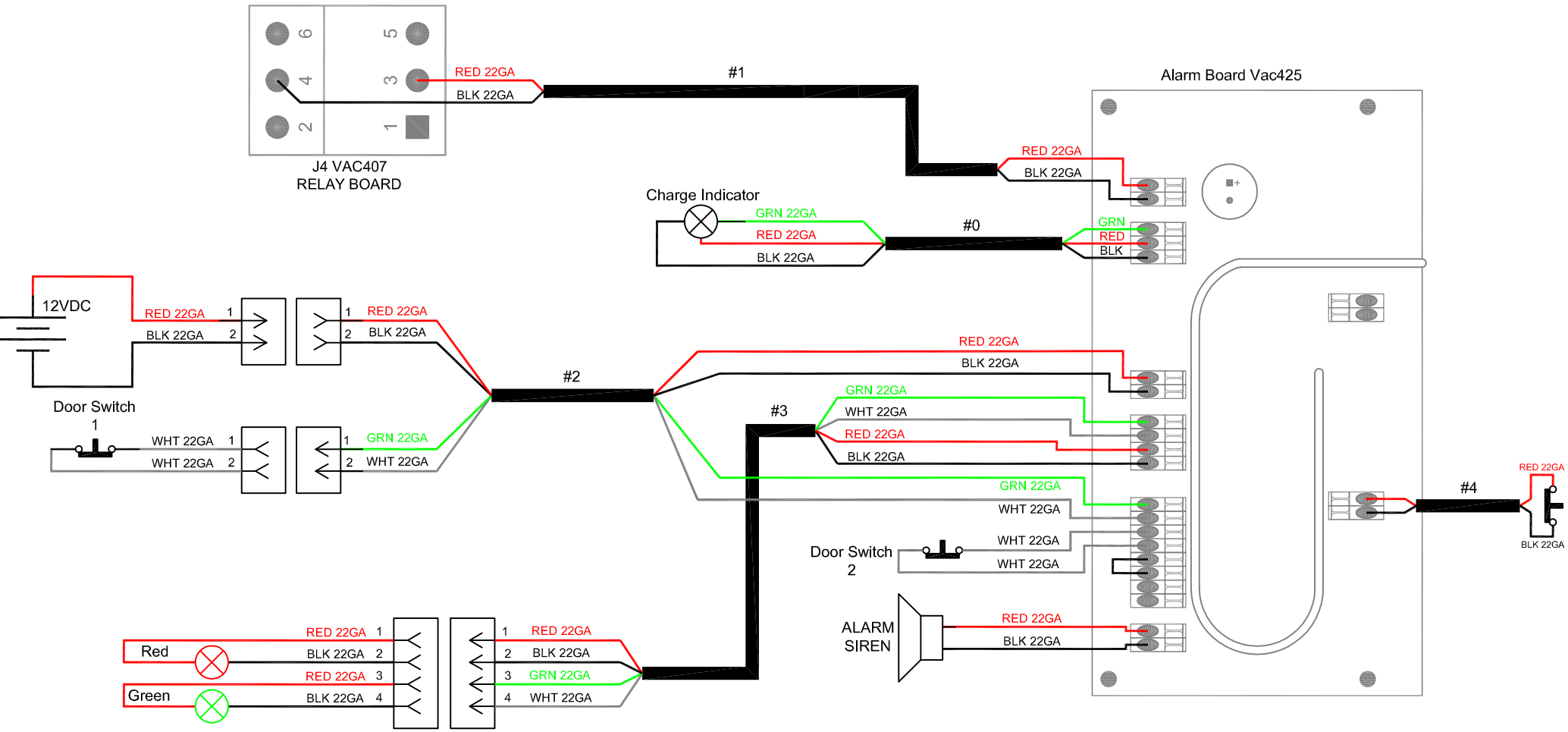

WIRING DIAGRAM FOR ALARM BOARD